Central Brass
MANUFACTURING COMPANY
2950 East 55th St. Cleveland, Ohio 44127
Phone: (216) 883-0220 Fax: (216) 883-0875
www.CentralBrass.com

MODEL NO. 0477-RC
UTILITY SHOWER

The utility shower faucet has a cast brass body with offset legs and 1/2” union supply connections. The stems are all brass with a double O-Ring seal and acrilonitrile seat washer. The shower riser is galvanized steel pipe. The utility shower faucet has a rough cast chrome plated finish.

Shower Flow Rate 2.5 gpm @ 80 psi
ASME A112.18.1M

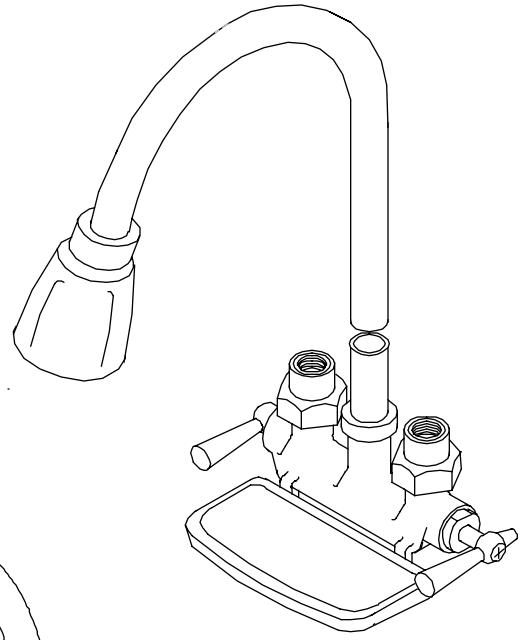

Installation Drawing

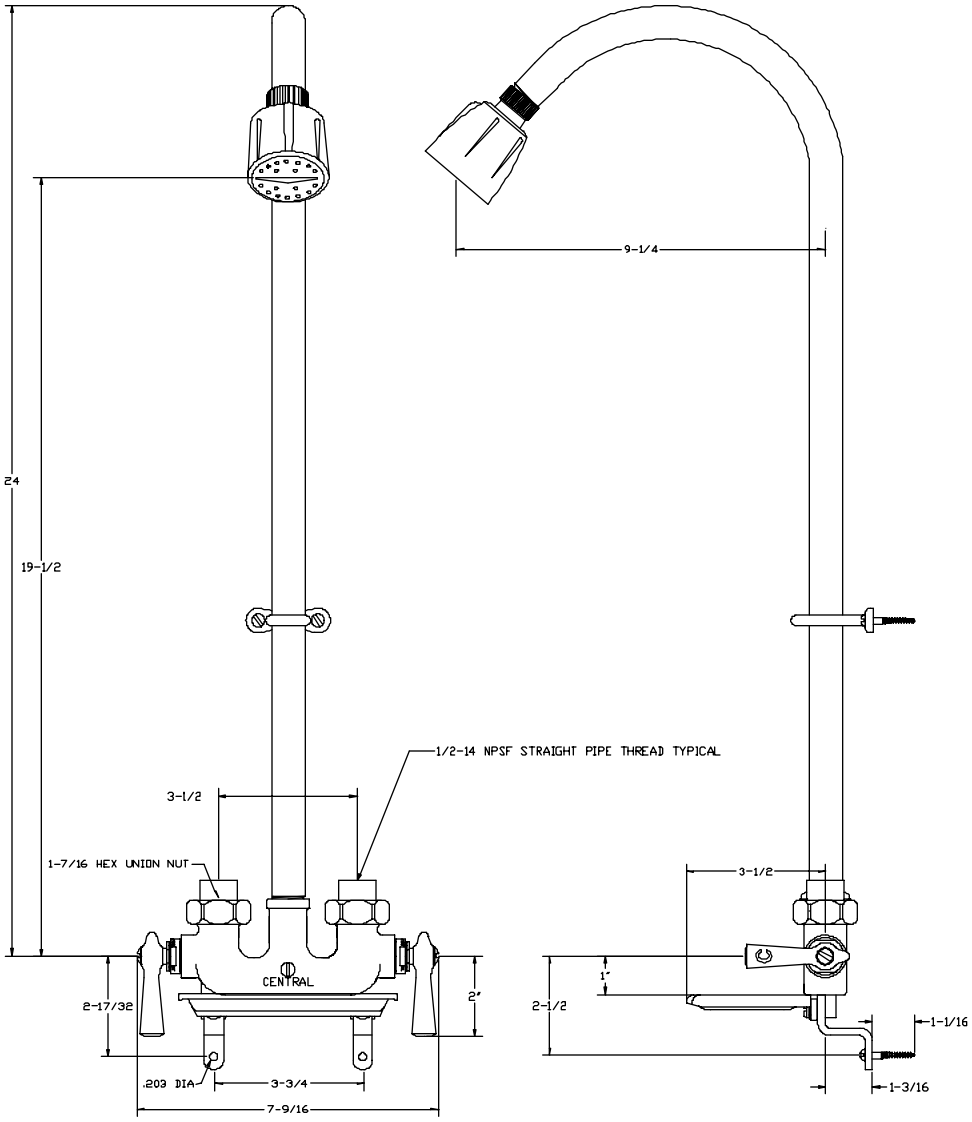

7-18-01

Central Brass
MANUFACTURING COMPANY
2950 East 55th St. Cleveland, Ohio 44127
Phone: (216) 883-0220 Fax: (216) 883-0875
www.CentralBrass.com

MODEL NO. 0477-RC
UTILITY SHOWER

Parts Breakdown

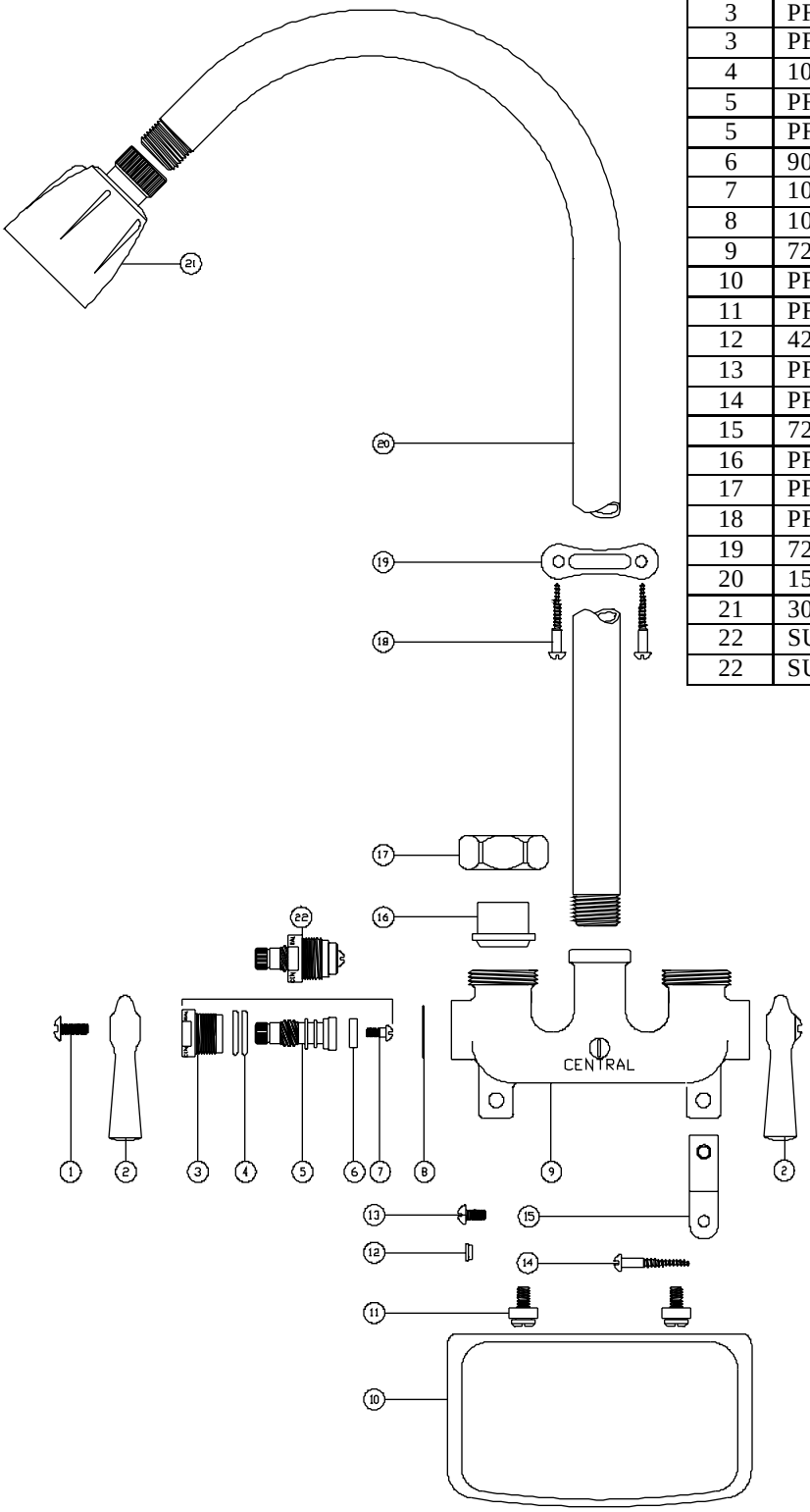

#	Part#	Description
1	126-S	Steel Screw
2	520-AC	Aluminum Handle Indexed “C”
2	520-AH	Aluminum Handle Indexed “H”
3	PF-453-EWC	Brass Left Thread O-Ring Bonnet - CP
3	PF-453-EWH	Brass Right Thread O-Ring Bonnet - CP
4	1038-453	O-Ring
5	PF-453-FL	Brass Left Thread O-Ring Stem – CP
5	PF-453-FR	Brass Right Thread O-Ring Stem – CP
6	901-WN	Seat Washer
7	104	Brass Seat Washer Screw
8	1028-Y	Nylon Gasket
9	7223-ARC	Brass Body - CP
10	PF-259-X	Brass Soap Dish
11	PF-105-U	Brass Screw
12	420-N	Nylon Washer
13	PF-105-H	Brass Screw
14	PF-128	Brass Screw
15	7237-RC	Brass Leg – CP
16	PF-1875	Brass Union
17	PF-1876-BBRC	Brass Coupling
18	PF-128	Brass Screw
19	7238-RC	Brass Bracket – CP
20	157-I	Steel Riser
21	3034-1/2-02	Showerhead
22	SU-453-ELRC	Left Thread O-Ring Stem Assembly
22	SU-453-ERRC	Right Thread O-Ring Stem Assembly